simex.it

PRODUCT CATALOGUE

SIMEX
HEAVY MADE EASY

A SOLID BACKGROUND & WORLDWIDE PRESENCE

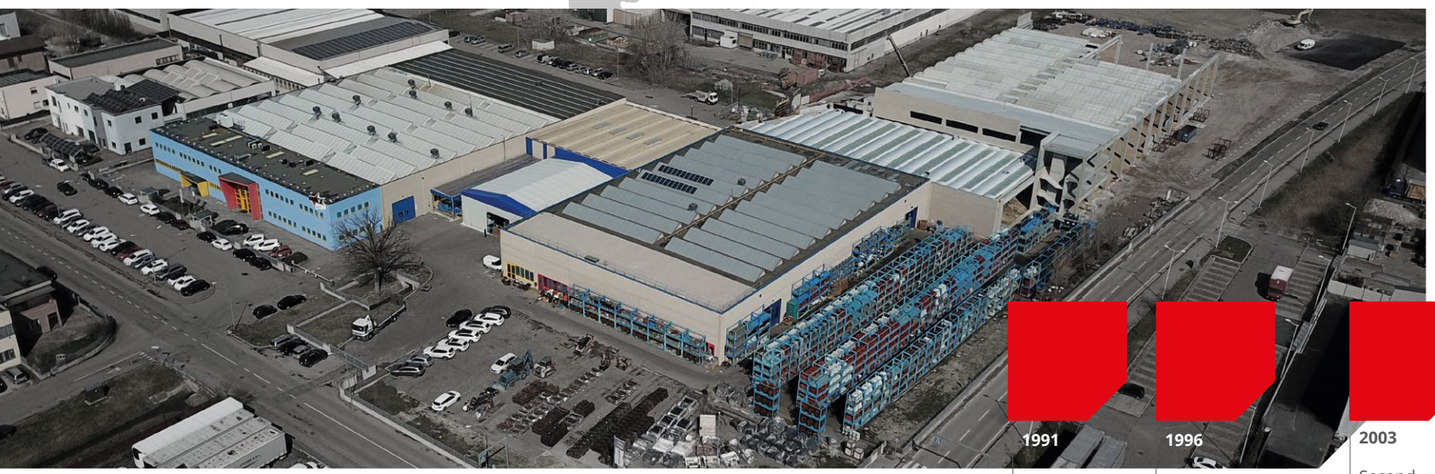

HYDRAULIC ATTACHMENTS FOR EARTHMOVING MACHINES

SIMEX IS THE TECHNOLOGICAL PARTNER OF REFERENCE FOR COUNTLESS APPLICATIONS, EVEN THE MOST CHALLENGING AND COMPLEX.

Thanks to a know-how developed over time, the patrimony of its production and investments in R&D, Simex provides concrete, highly efficient responses to the ever new and complex requirements of the market. The company, while constantly interfacing with the markets of reference, harmonizes production and sales based on the contingent and potential demands of end users. Simex attachments, marked by superlative durability and engineering excellence, guarantee the optimization of costs and execution times with consequent benefits for the dealer and user.

HEAVY
MADE
EASY

1991
Foundation of Simex

1996
New production facility

2003
Second production facility and new demo area

2006
Introduction of new robotic welding stations

2010
Third warehousing facility and R&D area

2016
Opening of "OOO Simex Rus" in Moscow

2017
Production of the 30,000th planer for asphalt; expansion of second production facility

2019
Opening of fourth logistics and production facility

TAKE THE NEXT STEP

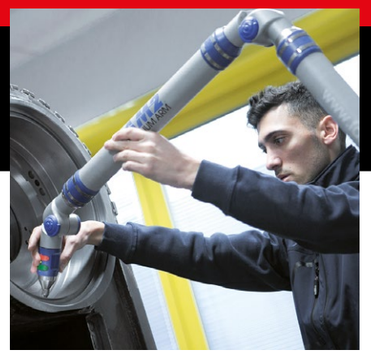

KNOW HOW

Simex know-how is driven by a constant and attentive eye on our markets of reference.

The consolidated skills exemplified by our technical and sales departments stem from the in-depth study of how our products will best meet the application. Simex develops products by focusing on the technical problems specific to each application scenario.

POWERFUL PRODUCTION

Simex products are designed and engineered to be exceptionally durable and high-performing.

Our attachments are created to solve specific problems related to the myriad applications they are used for, while guaranteeing highly efficient production for the end user.

The production process is guided by a deep awareness that we are a true technological partner for all our customers in Italy and around the world.

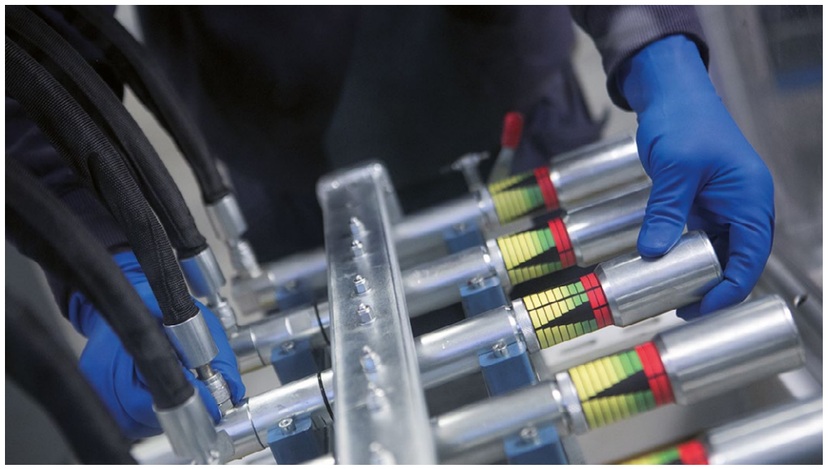

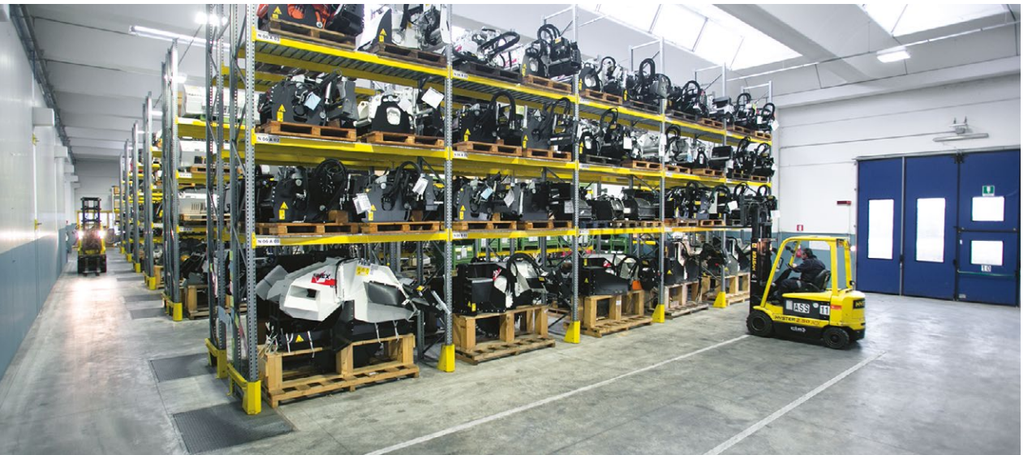

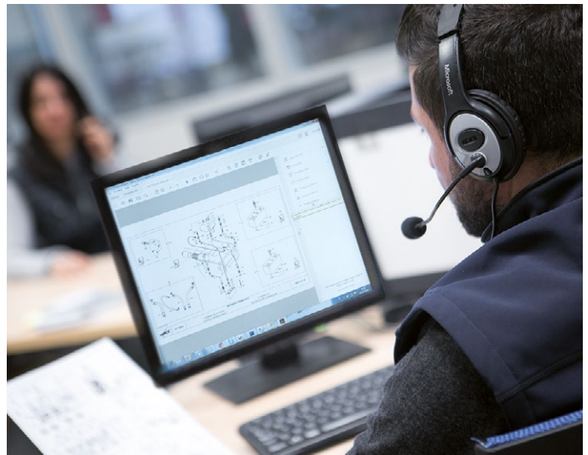

R&D

Constant investment in R&D is an essential lever for the success of Simex and the pioneering quality of our production.

The numerous patents Simex has filed over the years are testimony of how Simex maintains and continuously renews its innovative leadership. The company continually produces innovative solutions for the many, and increasingly complex, demands of a market in continuous evolution.

FULL LINE PRODUCTION

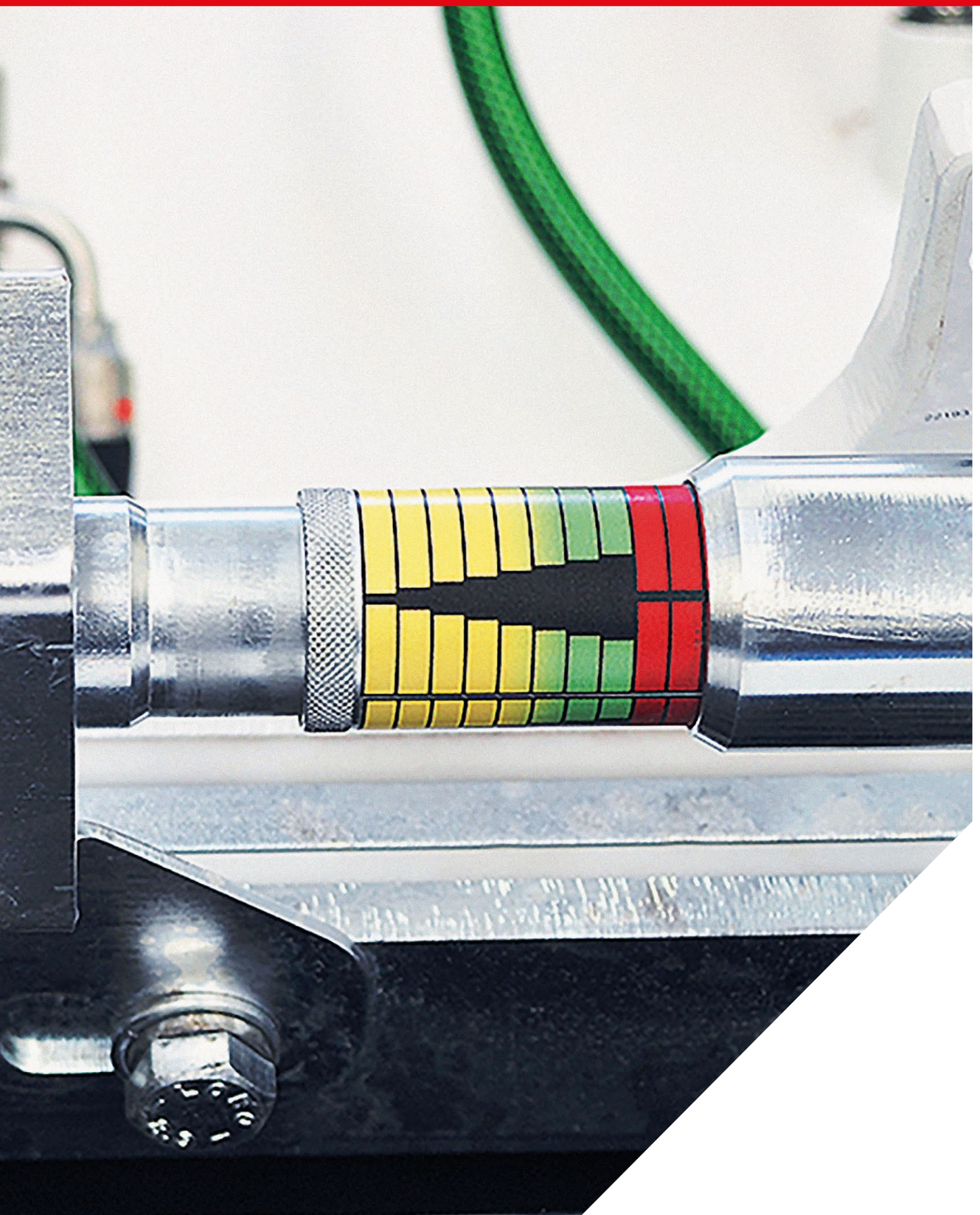

SIMEX patent

PERFORMER

Performer lets you work better, faster and get more done.

PERFORMER, THE PERFORMANCE OPTIMIZER
Informs the operator how to work with Simex attachments to maximize their power and performance (*optional*).

SELF-CALIBRATING
The Simex patent allows the device to self-calibrate exactly to the maximum pressure of the prime mover the attachment is mounted on.

EASY TO READ
Positioned where the operator can keep a constant eye without being distracted from machine operation. Has different colors and a graphic scale for easy reference.

SCAN THE QR CODE WITH A SMARTPHONE TO SEE THE PERFORMER VIDEO.

SELF-CALIBRATION

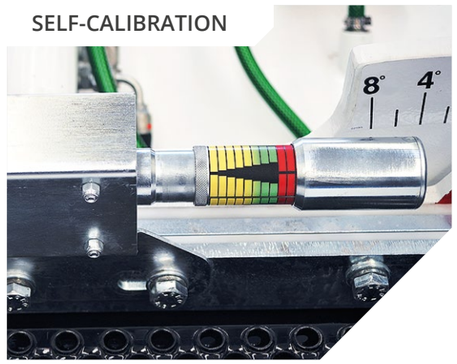

ERGONOMIC POSITION

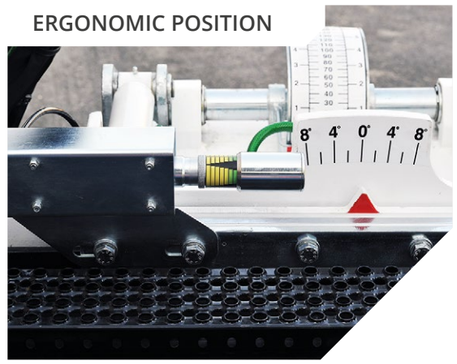

SIMEX
HEAVY MADE EASY

RANGE

TF

CUTTER HEADS

DOUBLE DRUM

TF 200 | TF 400 | TF 600 | TF 850 | TF 1100 | TF 2100 | TF 2500 | TF 3100

- Precise cut
- Low vibrations
- High performance
- Low noise level
- Deep and narrow trenches
- Underwater works
- Maintenance-free
- Milled material reused on site

RANGE
TF

CUTTER HEADS
DOUBLE-DRUM

TF 200
TF 400
TF 600
TF 850
TF 1100
TF 2100
TF 2500
TF 3100

Utilities
Quarries and mines
Demolition
Port and underwater works
Construction and building
Infrastructure
Tunneling
Agriculture and forestry
Recycling
Roadworks
Trenching

Mini-excavator
Excavator
Skid steer loader
Front loader
Backhoe

Simex TF cutter heads are **ideal for trenching, profiling rock and concrete walls, tunneling, quarrying, demolition, dredging, finishing operations and underwater works.**
They are highly effective where conventional excavation systems are too weak and percussion systems have little effect. Their quiet operation allows them to be put to work near sensitive areas (residential zones, hospitals, schools, bridges and infrastructures).

Especially recommended for **finishing operations**, where high precision, minimum disturbance and optimum aesthetic result are required.

SIMEX • patent •

ADVANTAGE

- Precise cut
- Low vibrations
- High performance
- Low noise level
- Deep and narrow trenches
- Underwater works
- Maintenance-free
- Milled material reused on site

TECHNICAL DATA		TF 200	TF 400	TF 600	TF 850	TF 1100	TF 2100	TF 2500	TF 3100
Recommended excavator weight	ton *lbs*	2,5 - 7 *5500 - 15500*	6 - 12 *13000 - 26500*	9 - 16 *19800 - 35200*	14 - 22 *30800 - 48500*	20 - 34 *44000 - 80000*	28 - 45 *61700 - 99000*	40 - 55 *88000 - 121000*	50 - 70 *110000 - 154000*
Weight without bracket *(1)*	kg *lbs*	300 *660*	470 *1050*	640 *1400*	1140 *2500*	1465 *3200*	2410 *5300*	2700 *5950*	3650 *8000*
Hydraulic motor power	kW (hp)	27 (37)	37 (50)	50 (68)	61 (83)	87 (118)	112 (152)	140 (190)	175 (238)
Rotation torque	kNm *lbf.ft*	2,5 *1850*	4,6 *3390*	6,9 *5090*	10,6 *7820*	17,5 *12900*	25,4 *18700*	33,7 *25800*	45,4 *33500*
Cutting force	kN *lbf*	13,5 *3035*	20,3 *4600*	27,6 *6200*	35,2 *7900*	53,4 *12000*	68,0 *15250*	90,0 *20200*	121 *27200*
Max. pressure *(2)*	BAR *psi*	350 *5100*	350 *5100*	350 *5100*	350 *5100*	350 *5100*	380 *5500*	380 *5500*	380 *5500*
Required oil flow	l/m *gpm*	45 - 80 *12 - 21*	65 - 120 *17 - 32*	90 - 150 *24 - 40*	130 - 190 *34 - 50*	170 - 250 *45 - 66*	240- 340 *63 - 90*	280 - 400 *74 - 105*	350 - 500 *92 - 132*

(1) User is responsible for ensuring that the equipment meets the excavator's specifications and weight requirements.
(2) Torque and cutting force decrease with lowered operating pressure.

Simex does not accept responsibility or liability for the information provided. Technical modifications may vary without prior notice.

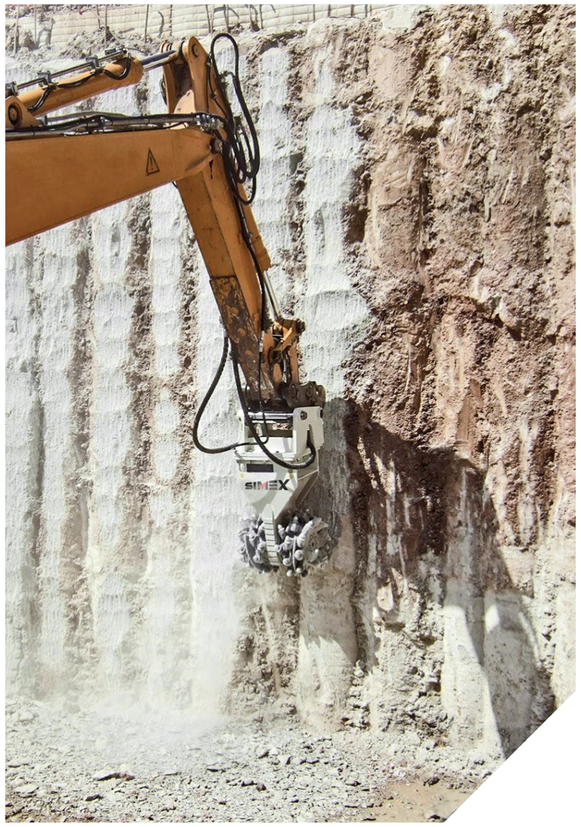

SIMEX
HEAVY MADE EASY

TF 200
TF 400
TF 600
TF 850
TF 1100
TF 2100
TF 2500
TF 3100

Utilities
Quarries and mines
Demolition
Port and underwater works
Construction and building
Infrastructure
Tunneling
Agriculture and forestry
Recycling
Roadworks
Trenching
Mini-excavator
Excavator
Skid steer loader
Front loader
Backhoe

INCREASED PRODUCTIVITY AND MAXIMUM PRECISION

cutter head can be rotated 90° thanks to square holes of coupling plate.

HYDRAULIC ROTATION 360° *Optional*

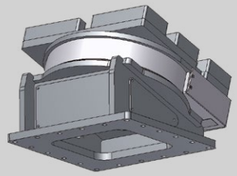

Hydraulic rotation allows operator to find the ideal working position.

Increased productivity

Maximum precision

MILLED MATERIAL IS DISCHARGED FROM TRENCH WITHOUT GETTING STUCK IN THE FRAME

thanks to special shape, which also allows **hoses to be hooked up at sides and front.**

SAFE FROM IMPURITIES

from the outside thanks to filter on feed line.

REPLACEABLE ANTI-WEAR PLATES

DRUMS AND TEETH FOR ANY APPLICATION

designed to achieve higher efficiency based on the required application. Many teeth geometries exist for working on a range of materials.

DUST-PROOF

mechanical seals on drums prevent dust from entering, even when attachment is submerged into the ground, muddy conditions included. Filter on feed line prevents impurities from entering motor.

HIGH TORQUE AND HIGH PERFORMANCE

guaranteed by **integrated high displacement hydraulic piston motor. Shaft transmits motion only and bears no load** thanks to double support bearings for each drum.

SIMEX • patent •

RATIO BETWEEN CUTTING EFFICIENCY AND COMPRESSIVE STRENGTH

The graph below gives an approximate indication of the ratio between cutting efficiency of each cutter head model in optimal conditions and the unconfined compressive strength of the rock. Since many variables exist regarding the material (fracturing, weathering, ductility, etc.), the prime mover and the operability, the ratio should be understood as only an approximation of cutting efficiency. The actual production may be estimated after all noted variables are taken into account.

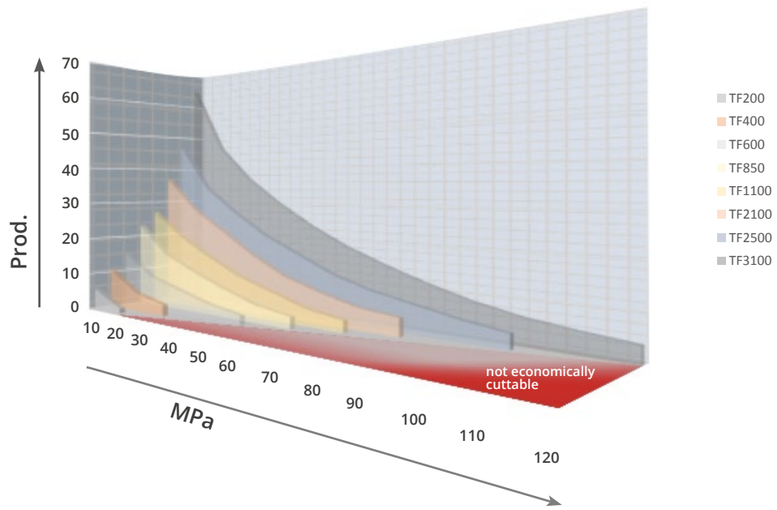

EFFICACY ON DIFFERENT TYPES OF TERRAIN

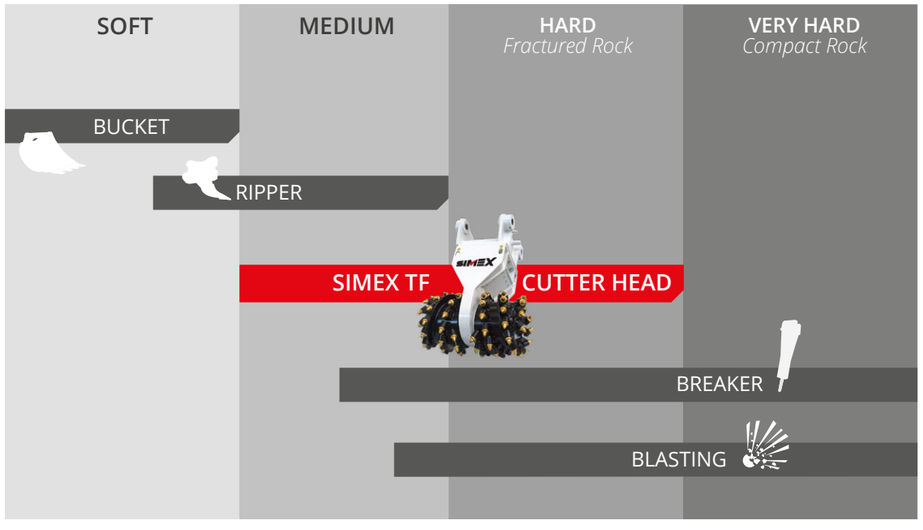

DRUMS available:

HP *(Standard)*
Penetrates deep, even into hard materials.

GP *(Optional)*
Recommended for wall profiling and various types of jobs.

WB *(Optional)*
Special drum for finishing and profiling.

HP (Standard)

GP (Optional)

WP (Optional)

TEETH available:

Standard

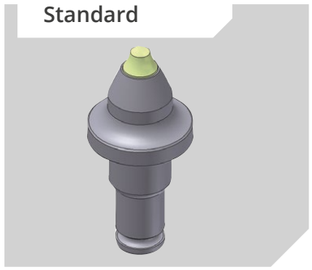

Mixed materials

Optional

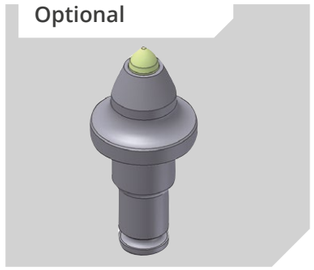

Hard materials

Optional

For wood

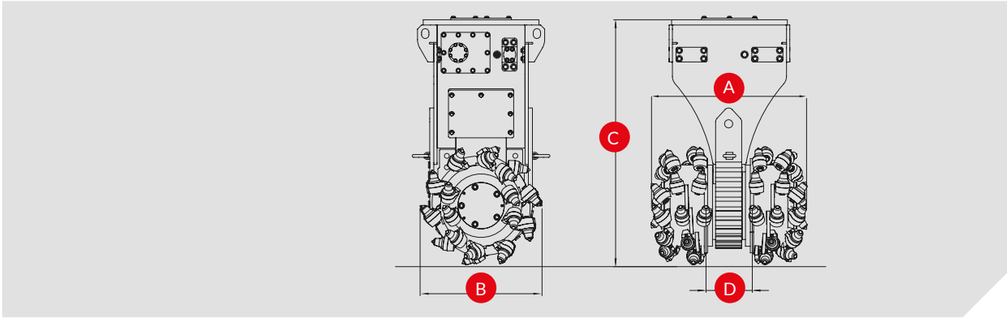

TECHNICAL DATA		TF 200	TF 400	TF 600	TF 850	TF 1100	TF 2100	TF 2500	TF 3100
Drum width (HP) *standard* **A**	mm *inch*	565 *22*	625 *25*	700 *28*	800 *32*	850 *34*	950 *38*	1000 *40*	1250 *50*
Drum width (GP) *optional* **A**	mm *inch*	-	-	-	900 *36*	1000 *40*	1100 *43*	1150 *45*	1350 *53*
Drum width (WP) *optional* **A**	mm *inch*	650 *26*	750 *30*	850 *34*	1000 *40*	1200 *47*	-	-	-
HP drum diameter **B**	mm *inch*	*380* *15*	*450* *18*	*500* *20*	*595* *24*	*660* *26*	*750* *30*	*750* *30*	*750* *30*
Height without bracket **C**	mm *inch*	*770* *30*	*900* *35*	*960* *38*	*1250* *49*	*1310* *52*	*1575* *62*	*1675* *66*	*1770* *70*
Drum distance **D**	mm *inch*	*110* *4*	*130* *5*	*130* *5*	*150* *6*	*160* *6,3*	*175* *7*	*250* *10*	*300* *12*
Tooth holder diameter	mm *inch*	*20* *0,8*	*22* *0,9*	*22* *0,9*	*38/30* *1,5/1,2*	*38/30* *1,5/1,2*	*38/30* *1,5/1,2*	*38/30* *1,5/1,2*	*38/30* *1,5/1,2*

SIMEX
HEAVY MADE EASY

RANGE

TFC

CUTTER HEADS

CONTINUOUS CUTTING

TFC 50 | TFC 100 | TFC 400

- Versatile
- Low noise output
- High precision
- Continuous cutting

RANGE
TFC

CUTTER HEADS
CONTINUOUS CUTTING

TFC 50
TFC 100
TFC 400

Utilities
Quarries and mines
Demolition
Port and underwater works
Construction and building
Infrastructure
Tunneling
Agriculture and forestry
Recycling
Roadworks
Trenching
Mini-excavator
Excavator
Skid steer loader
Front loader
Backhoe

The **patented cutter heads with continuous cutting** are specially designed for mounting on mini-excavators. Their **innovative system allows whole width of the attachment to cut without gaps at center or side footprints.** Ideal for **finishing** flat surfaces and trenches.

Quiet and precise in the work area, they do not intrude on the surrounding area. **Versatile and high-performing**, they can be utilized for crushing **roots and tree trunks**, milling **asphalt and concrete**, milling plaster *(thanks to lateral disks there is perfect control of the layer removed).*

ADVANTAGES

- Versatile
- Low noise output
- High precision
- Continuous cutting

TECHNICAL DATA			TFC 50	TFC 100	TFC 400
Width (cutting profile)		mm *inch*	370 *15*	480 / 430 (*) *19 / 17 (*)*	520 / 420 (*) *20,5 / 16,5 (*)*
Drum diameter (cutting profile)		mm *inch*	230 *9*	260 *10*	450 *18*
Weight *(1)*		kg *lbs*	90 *200*	170 *374*	500 *1100*
Recommended excavator weight *(2)*		ton *lbs*	1,2 - 3,0 *2640 - 6600*	2,5 - 4,5 *5600 - 9900*	6 - 14 *13000 - 31000*
Required oil flow *(3)*		l/min *gpm*	20 - 40 *5 - 11*	30 - 60 *8 - 16*	65 - 115 *17 - 30*
Max. required oil pressure *(4)*		BAR *psi*	250 *3625*	300 *4350*	300 *4350*
Max. torque	**at 250 BAR** *at 3625 psi*	Nm *lbf.ft*	600 *445*	-	-
Max. torque	**at 300 BAR** *at 4350 psi*	Nm *lbf.ft*	-	1060 *780*	3900 *2875*
Max. cutting force	**at 250 BAR** *at 3625 psi*	N *lbf*	*5100* *1145*	- -	- -
Max. cutting force	**at 300 BAR** *at 4350 psi*	N *lbf*	-	*8100* *1820*	*17500* *12900*

(*) Narrow drums for increased penetration.
(1) Without mounting bracket to boom.
(2) User is responsible for ensuring that the equipment meets the excavator's specifications and weight requirements.
(3) RPM and cutting speed decrease with lowered oil flow.
(4) Torque and cutting force decrease with lowered operating pressure.

Simex does not accept responsibility or liability for the information provided. Technical modifications may vary without prior notice.

SIMEX
HEAVY MADE EASY

SIMEX
HEAVY MADE EASY

RANGE

TFV

CUTTER HEADS
VERTICAL

TFV 400 | TFV 600 | TFV 850

- High performance
- High precision
- Low vibrations
- Maintenance-free
- Versatile

RANGE
TFV

CUTTER HEADS
VERTICAL

TFV 400
TFV 600
TFV 850

Utilities
Quarries and mines
Demolition
Port and underwater works
Construction and building
Infrastructure
Tunneling
Agriculture and forestry
Recycling
Roadworks
Trenching
Mini-excavator
Excavator
Skid steer loader
Front loader
Backhoe

Intended for **excavator mounting**, Simex TFV vertical cutter heads are i**deal for profiling, excavating irregular shapes, cropping piles, trenching smaller widths, removing iron and steel residues, or mixing soils**.

Milling drums available for different applications and diameters.

ADVANTAGES

- High performance
- High precision
- Low vibrations
- Maintenance-free
- Versatile

TECHNICAL DATA		TFV 400	TFV 600	TFV 850
Recommended excavator weight *(1)*	ton *lbs*	7 - 12 *15400 - 26400*	10 - 18 *22000 - 39600*	15 - 25 *33000 - 55000*
Rotation speed	giri/min *rpm*	100	90	80
Diameter	mm *inch*	380 *15*	420 *17*	450 *18*
Height without bracket	mm *inch*	1000 *40*	1100 *43*	1200 *48*
Max. power	kW (hp)	37 (50)	50 (68)	60 (82)
Operating weight *(2)*	kg *lbs*	245 *540*	400 *880*	570 *1255*
Required oil flow	l/min *gpm*	60 - 110 *16 - 29*	100 - 140 *26 - 37*	120 - 170 *32 - 45*
Max. oil pressure	BAR *psi*	350 *5100*	350 *5100*	350 *5100*

(1) User is responsible for ensuring that the equipment meets the excavator's specifications and weight requirements.
(2) Without mounting bracket attaching to prime mover.

Simex does not accept responsibility or liability for the information provided. Technical modifications may vary without prior notice.

SIMEX
HEAVY MADE EASY

SIMEX
HEAVY MADE EASY

RANGE

VSE

SCREENING BUCKET

ADJUSTABLE OUTPUT SIZE

VSE 10 **VSE 20** **VSE 30** **VSE 40**

- Quick adjustment of output size
- Effective with wet material
- High productivity
- Simple operation
- Easy loading
- Easily replaceable screening tools

RANGE
VSE

SCREENING BUCKET

ADJUSTABLE OUTPUT SIZE

VSE 10
VSE 20
VSE 30
VSE 40

Utilities
Quarries and mines
Demolition
Port and underwater works
Construction and building
Infrastructure
Tunneling
Agriculture and forestry
Recycling
Roadworks
Trenching
Mini-excavator
Excavator
Skid steer loader
Front loader
Backhoe

Designed for **separating different-sized materials on the work site**, Simex VSE screening buckets are unique for their **easy loading, very simple operation and high productivity**.

The exclusive Simex patent allows **rapid adjustment of output size** of the screened material in only seconds via a control in the operator cabin.

SIMEX • patent •

ADVANTAGES

- Quick adjustment of output size
- Effective with wet material
- High productivity
- Simple operation
- Easy loading
- Easily replaceable screening tools

TECHNICAL DATA		VSE 10	VSE 20	VSE 30	VSE 40
Recommended excavator weight *(1) (2)*	ton *lbs*	8 - 13 *17500 - 29000*	12 - 18 *26000 - 40000*	16 - 30 *35000 - 66000*	30 - 45 *66000 - 99000*
Mouth width	mm *inch*	860 *34*	1100 *43*	1260 *50*	1340 *53*
Total width	mm *inch*	1220 *48*	1485 *58*	1650 *65*	1835 *72*
Bucket capacity (SAE)	m^3 *yd^3*	0,40 *0,52*	0,70 *0,92*	1,00 *1,30*	1,80 *2,35*
Screening area	m^2 *yd^2*	0,56 *0,67*	0,80 *0,96*	1,00 *1,20*	1,36 *1,63*
Shaft travel	mm *inch*	40 *1,6*	40 *1,6*	40 *1,6*	40 *1,6*
Number screening shafts	n°	2	2	2	3
Operating weight *(3)*	kg *lbs*	965 *2125*	1400 *3080*	1845 *4060*	2725 *6000*
Required oil flow	l/min *gpm*	90 - 125 *24 - 33*	100 - 150 *27 - 40*	165 - 220 *44 - 58*	180 - 280 *48 - 74*
Max. required oil pressure	BAR *psi*	250 *3600*	250 *3600*	250 *3600*	250 *3600*

(1) The maximum operating load permitted for the excavator, when added to the weight of the standard bucket, must match or exceed the weight of the bucket at full load.
(2) User is responsible for ensuring that the equipment meets the excavator's specifications and weight requirements.
(3) Without mounting bracket.

HIGH INCREASE IN PRODUCTIVITY

Shafts are composed of elements with varying-sized disks that produce an intense **whirling of the material to be screened.**

HIGH PRODUCTIVITY

Even when working with wet soil

EASY LOADING

Wide mouth shaped as standard bucket

SCREENING TOOLS ARE EASILY REPLACEABLE

Screening elements have different profiles to work with various materials. **Tool replacement is rapid and requires no disassembly of shafts.**

SIMEX • patent •

SIMEX PATENT

Quick adjustment of output size.

Thanks to a simple control from the operator cabin, the Simex-patented mechanism allows shafts to be distanced or closed via a hydraulic system to **vary output size of screened material in only seconds.** Alternatively, the adjustment can be made by a remote control *(optional).*

MINIMUM/MAXIMUM

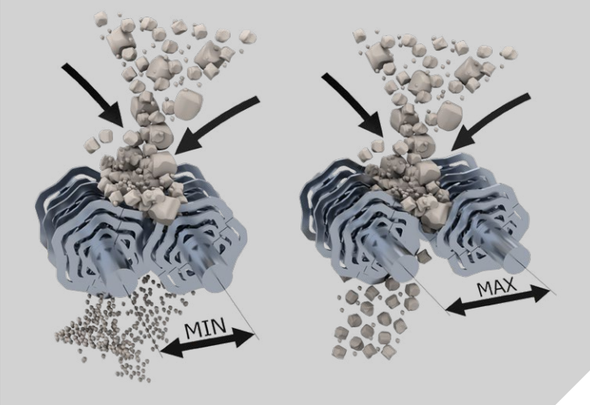

STANDARD TOOLS

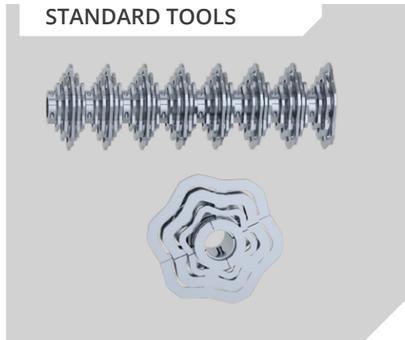

Tool for screening mixed material

BREAKING TOOLS

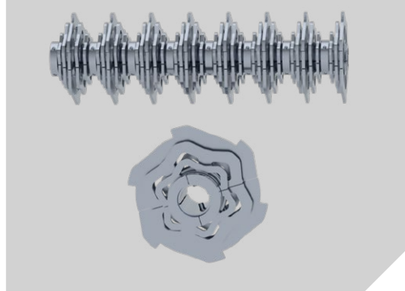

Tool for screening and breaking up light materials

MIXED TOOLS

Tool with blade for cutting non-stony objects contained in the material

SIMEX
HEAVY MADE EASY

RANGE

CBE

CRUSHER BUCKETS

CBE 10 | CBE 20 | CBE 30 | CBE 40 | CBE 50

- Low noise output
- High cutting force
- High productivity
- Lightweight frame
- No vibrations
- Easy back or front loading
- Simple, quick tool replacement
- Works fast and efficiently
- Anti-wear tools: better protection and longer life

RANGE
CBE

CRUSHER BUCKETS

CBE 10
CBE 20
CBE 30
CBE 40
CBE 50

Utilities
Quarries and mines
Demolition
Port and underwater works
Construction and building
Infrastructure
Tunneling
Agriculture and forestry
Recycling
Roadworks
Trenching
Mini-excavator
Excavator
Skid steer loader
Front loader
Backhoe

Designed to **reduce the volume of aggregates** directly on site, CBE crusher buckets with rotor system provide **optimal performance when working with iron, rock, soil and deformable parts**, and wet or humid materials. Ideal for **crushing reinforced concrete and demolition waste**. The exceptional cutting force allows any material to be crushed. The rotor with teeth is activated by high-displacement radial piston hydraulic motors in direct drive.

Automatic system **inverts rotation of the drum in case of blocking** (Simex patent).

Crushable materials: bricks, reinforced concrete, natural aggregates, concrete, tiles, glass and asphalt slabs. **Unaffected by the presence of earth, wet or humid material, or iron rods.**

SIMEX • patent •

ADVANTAGES

- Low noise output
- High cutting force
- High productivity
- Lightweight frame
- No vibrations
- Easy back or front loading
- Simple, quick tool replacement
- Works fast and efficiently
- Anti-wear tools: better protection and longer life

TECHNICAL DATA		CBE 10	CBE 20	CBE 30	CBE 40	CBE 50
Recommended excavator weight *(1) (2)*	ton *lbs*	8 - 13 *17500 - 28600*	10 - 18 *22000 - 5500*	16 - 28 *35000 - 61600*	24 - 40 *53000 - 88000*	38 - 55 *84000 - 121000*
Mouth width	mm *inch*	1030 *41*	1180 *46*	1410 *55*	1630 *64*	2200 *87*
Total width	mm *inch*	1220 *48*	1485 *58*	1700 *67*	1960 *77*	2440 *96*
Rotor width	mm *inch*	725 *28*	735 *29*	915 *36*	1050 *41*	1290 *51*
Bucket capacity (SAE)	m^3 *yd^3*	0,40 *0,52*	0,60 *0,78*	0,80 *1,04*	1,00 *1,30*	1,80 *2,35*
Number of teeth	n°	5	5	6	7	10
Max. cutting force	kN *lbf*	80 *18000*	95 *21500*	125 *28000*	152 *34000*	190 *42700*
Bucket weight empty *(3)*	kg *lbs*	880 *1950*	1320 *2900*	2170 *4800*	2900 *6400*	4640 *10200*
Required oil flow	l/min *gpm*	80 - 160 *21 - 42*	100 - 190 *26 - 50*	150 - 250 *40 - 66*	200 - 350 *53 - 92*	300 - 550 *79 - 145*
Max. required oil pressure	BAR *psi*	350 *5100*	350 *5100*	350 *5100*	350 *5100*	350 *5100*

1) The maximum operating load permitted for the excavator, when added to the weight of the standard bucket, must match or exceed the weight of the crusher bucket at full load.
(2) User is responsible for ensuring that the equipment meets the excavator's specifications and weight requirements.
(3) Without mounting bracket.

Simex does not accept responsibility or liability for the information provided. Technical modifications may vary without prior notice.

SIMEX HEAVY MADE EASY

EASY LOADING

Works fast and efficiently thanks to the drum design and large mouth shaped as a standard bucket.
Can operate with back or front loading.

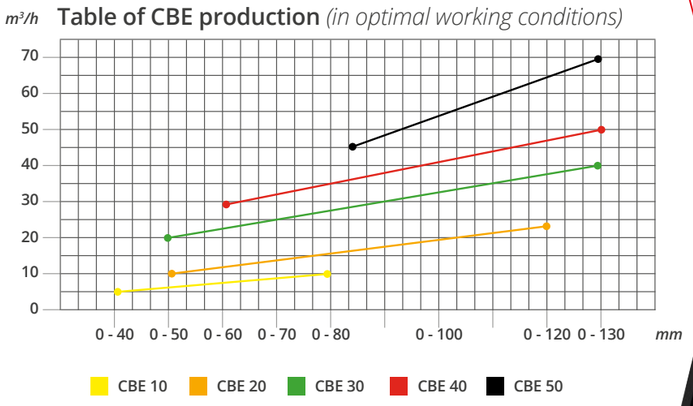

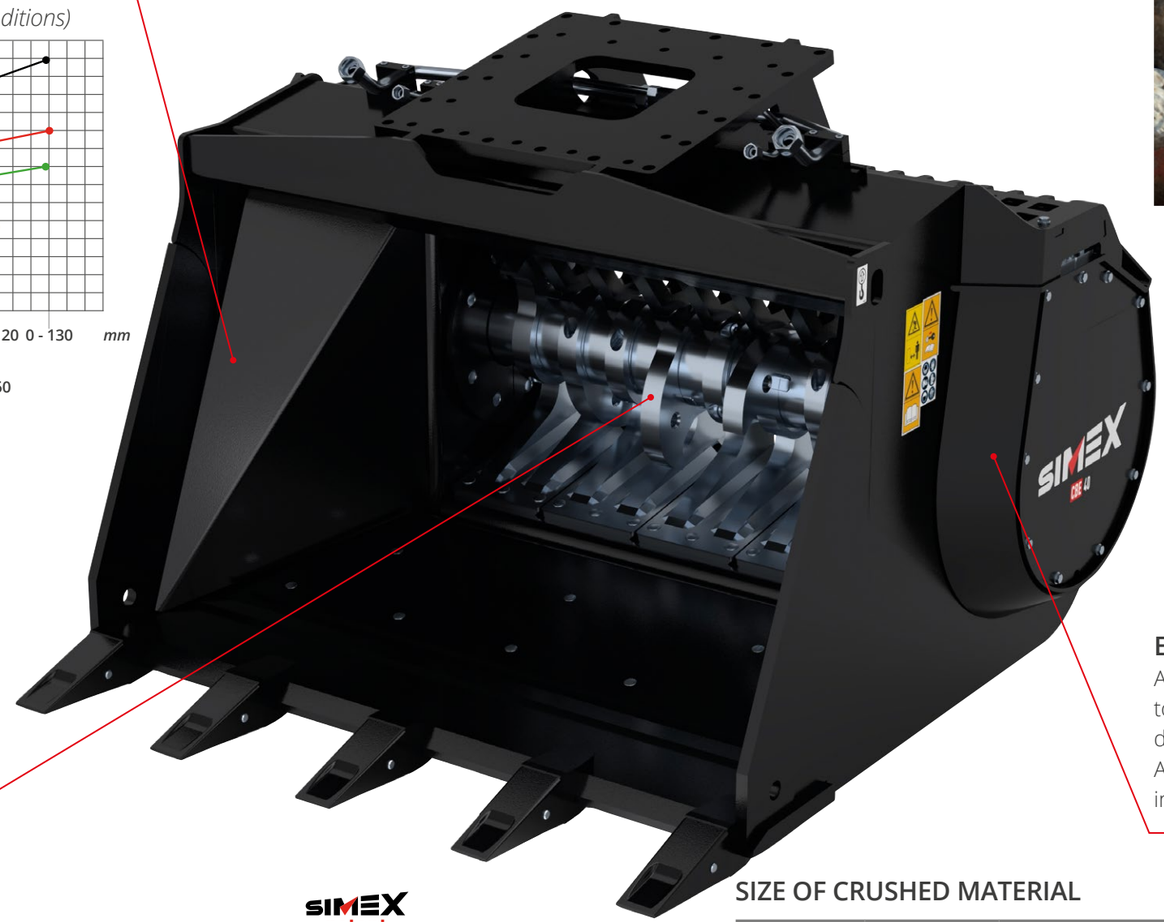

SIMEX • patent •

BETTER PROTECTION AND LONGER LIFE

Thanks to tools with anti-wear surface.
Simple, quick tool replacement.

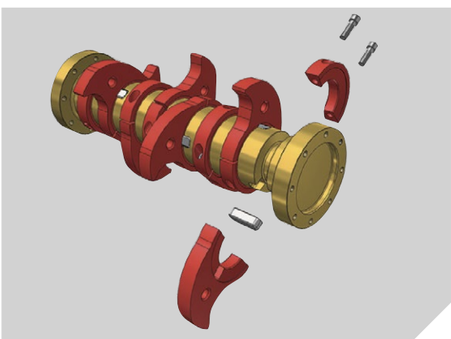

UNAFFECTED

by the presence of iron rods, soil, humid or wet material.

Crushable materials: bricks, reinforced concrete, natural aggregates, concrete, tiles, glass and asphalt slabs.

CRUSHABLE MATERIALS

EXCEPTIONAL CUTTING FORCE

Allows crushing of any material thanks to rotor activated by hydraulic piston motors in direct drive.
Automatic system inverts drum rotation in case of blocking.

SIZE OF CRUSHED MATERIAL

mm	*inch*	CBE 20	CBE 30	CBE 40	CBE 50
0 - 40	*0 - 1,6*				
0 - 50	*0 - 2,0*	■	■		
0 - 60	*0 - 2,4*	■	■	■	
0 - 70	*0 - 2,8*	○	○	○	
0 - 80	*0 - 3,2*	■	■	■	○
0 - 100	*0 - 4,0*	■	■	■	■
0 - 120	*0 - 4,7*	■	■	■	■
0 - 130	*0 - 5,1*			■	■

■ Standard
○ On request

SIMEX
HEAVY MADE EASY

RANGE
PLB/PHD

PLANERS

PLB 200 | PLB 300 | PLB 400 | PLB 450 | PHD 600 | PLB 350 | PHD 450 | PLB 450N

- Mill on horizontal, vertical or sloped surfaces
- Constant planing depth
- Independent RH-LH depth adjustment
- Perfect surfaces with side-by-side passes

RANGE
PLB/PHD

PLANER

PLB 200
PLB 300
PLB 400
PLB 450
PHD 600
PLB 350
PHD 450
PLB 450N

Utilities
Quarries and mines
Demolition
Port and underwater works
Construction and building
Infrastructure
Tunneling
Agriculture and forestry
Recycling
Roadworks
Trenching

Mini-excavator
Excavator
Skid steer loader
Front loader
Backhoe

Designed to **mill pre-set** sections on hard and compact surfaces, the PLB and PHD planers for excavators **are able to remove the entire layer of asphalt or concrete in preparation for trenching, or are used to mill deteriorated sections for later resurfacing.**

They can work on horizontal, vertical or sloped surfaces.

SIMEX • patent • PERFORMER

ADVANTAGES

- Mill on horizontal, vertical or sloped surfaces
- Constant planing depth
- Independent RH-LH depth adjustment
- Perfect surfaces with side-by-side passes

TECHNICAL DATA

		SINGLE DEPTH					DOUBLE DEPTH		FREE
		PLB 200	PLB 300	PLB 400	PLB 450	PHD 600	PLB 350	PHD 450	PLB 450N
Recommended excavator weight *(1)*	ton *lbs*	2 - 4 *4400 - 8800*	3 - 7 *6600 - 15400*	6 - 9 *13000 - 20000*	8 - 13 *17600 - 29000*	16 - 24 *35000 - 53000*	6 - 9 *13000 - 20000*	10 - 16 *22000 - 35000*	8 - 15 *17600 - 33000*
Standard drum									
Width	mm *inch*	200 *8*	300 *12*	400 *16*	450 *18*	600 *24*	350 *14*	450 *18*	450 *18*
Depth	mm *inch*	0 - 70 *0 - 3*	0 - 100 *0 - 4*	0 - 120 *0 - 5*	0 - 150 *0 - 6*	0 - 200 *0 - 8*	0 - 120 *0 - 5*	0 - 180 *0 - 7*	150 *6*
Special drums on request									
Width	mm *inch*	50 - 250 *2 - 10*	50 - 300 *2 - 12*	50 - 400 *2 - 16*	75 - 450 *3 - 18*	75 - 600 *3 - 24*	50 - 350 *2 - 14*	75 - 450 *3 - 18*	75 - 450 *3 - 18*
Max. depth	mm *inch*	125 *5*	130 *5*	150 *6*	200 *8*	250 *10*	150 *6*	220 *9*	220 *9*
Independent RH-LH depth adjustment	-	-	-	-	-	-	Standard	Standard	-
Min. distance from curb	mm *inch*	40 (20*) *1,6 (0,8*)*	50 (25*) *2 (1*)*	50 (25*) *2 (1*)*	60 (30*) *2,4 (1,2*)*	75 (40*) *2,6 (1,4*)*	50 (27*) *2 (1*)*	75 (40*) *3 (1,4*)*	-
Swinging support rotation angle	-	120°	127°	118°	120°	105°	118°	102°	180°
Operating weight	kg *lbs*	185 *407*	390 *860*	515 *1130*	710 *1560*	1150 *2530*	530 *1160*	900 *1980*	360 *790*
Required oil flow	l/min *gpm*	30 - 50 *8 - 13*	45 - 75 *12 - 20*	55 - 90 *15 - 24*	75 - 140 *20 - 37*	120 - 200 *32 - 53*	55 - 90 *15 - 24*	90 - 140 *24 - 37*	80 - 140 *21 - 37*
Max. required oil pressure *(2)*	BAR *psi*	250 *3625*	300 *4350*	300 *4350*	300 *4350*	300 *4350*	300 *4350*	300 *4350*	300 *4350*

(1) User is responsible for ensuring that the equipment meets the excavator's specifications and weight requirements.
(*) On request.

Simex does not accept responsibility or liability for the information provided. Technical modifications may vary without prior notice.

SIMEX
HEAVY MADE EASY

PLB 200
PLB 300
PLB 400
PLB 450
PHD 600
PLB 350
PHD 450
PLB 450N

Utilities
Quarries and mines
Demolition
Port and underwater works
Construction and building
Infrastructure
Tunneling
Agriculture and forestry
Recycling
Roadworks
Trenching

Mini-excavator
Excavator
Skid steer loader
Front loader
Backhoe

MECHANICAL DEPTH ADJUSTMENT
with telescopic screw or hydraulic (*Optional*).

SIMEX • patent •

THE INDEPENDENT RH-LH DEPTH
adjustment allows the slide on the opposite side of the motor to be height-adjusted independently, **resulting in perfect surfaces with side-by-side passes.**

ADJUSTABLE SLIDE

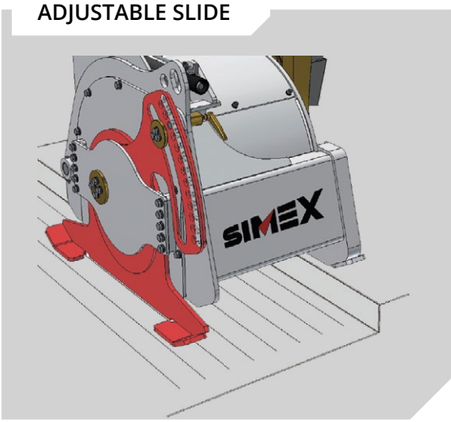

ROTATION UNIT *(Optional)*:
Planer quickly positions itself via 90° mechanical rotation with hydraulic locking (additional hydraulic lines not required) or 360° hydraulic rotation (*Optional*).

MECHANICAL ROTATION UNIT 90°

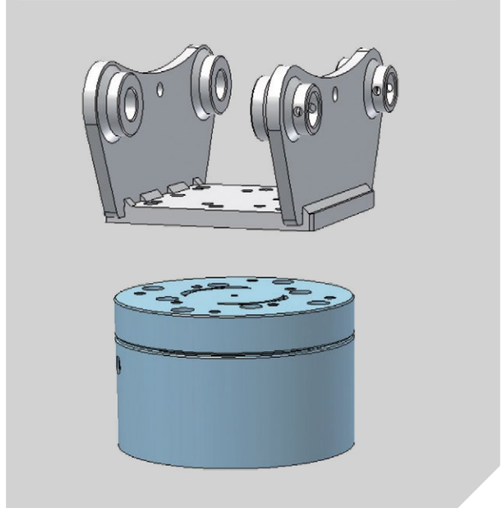

SIMEX • patent • PERFORMER

PERFORMER:
Informs the operator how to work with Simex attachments to maximize power and performance *(Optional).*

CONSTANT PLANING DEPTH
Thanks to the swinging support pivoted on the same rotation axis as the cutter drum, **the attachment maintains a perfect planing surface in any condition**, regardless of ground contour or the position of the attachment with respect to the prime mover.

SPECIAL DRUMS
available on request

SIMEX
HEAVY MADE EASY

RANGE

WG

WALL GRINDERS

WG 40 | WG 50 | WG 60

- Quiet operation
- No vibrations
- Ideal for removing shotcrete bumps
- Excellent surface finishing

RANGE
WG

WALL GRINDERS

WG 40
WG 50
WG 60

Utilities
Quarries and mines
Demolition
Port and underwater works
Construction and building
Infrastructure
Tunneling
Agriculture and forestry
Recycling
Roadworks
Trenching

Mini-excavator
Excavator
Skid steer loader
Front loader
Backhoe

Designed for excavator mounting, Simex WG wall grinders **are ideal for smoothing uneven surfaces and removing shotcrete bumps.**

Quiet operation and no vibrations. Optimal for working in sensitive areas (city centers, hospitals, schools, tunnels, etc.).

Excellent degree of surface finishing.

ADVANTAGES

- Quiet operation
- No vibrations
- Ideal for removing shotcrete bumps
- Excellent surface finishing

TECHNICAL DATA		WG 40	WG 50	WG 60
Recommended excavator weight *(1)*	ton *lbs*	3,5 - 7 *7700 - 15000*	6 - 12 *13000 - 26000*	12 - 20 *24000 - 40000*
Disk diameter	mm *inch*	400 *16*	500 *20*	600 *24*
Max. power	kN (hp)	22 (30)	34 (46)	50 (67)
Lateral tilt to right and left	-	55°	55°	55°
Rotation speed	*rpm*	130 - 160	130 - 160	100 - 130
Operating weight *(2)*	kg *lbs*	175 385	290 640	550 1210
Required oil flow	l/min *gpm*	45 - 70 *12 - 18*	60 - 110 *16 - 29*	100 - 180 *27 - 47*
Max. required oil pressure	BAR *psi*	300 *4350*	300 *4350*	300 *4350*

(1) User is responsible for ensuring that the equipment meets the excavator's specifications and weight requirements.
(2) Without mounting bracket attaching to prime mover.

Simex does not accept responsibility or liability for the information provided. Technical modifications may vary without prior notice.

SIMEX
HEAVY MADE EASY

SIMEX
HEAVY MADE EASY

RANGE

MP

CUTTER HEADS FOR PROFILING

MP 800 MP 1000

- Perfect finish
- Constant milling depth
- Milling on horizontal, vertical or sloped surfaces
- Ideal for profiling applications

RANGE
MP

CUTTER HEADS FOR PROFILING

MP 800
MP 1000

Simex MP cutter heads for profiling, designed for excavator boom mounting, guarantee precision finishing in applications such as: resurfacing tunnel roofs, rehabbing deteriorated surfaces, concrete embankments and industrial pavements.

Wheels or lateral slides allow milling thickness to remain constant in any condition. Excellent for materials such as **asphalt, concrete** and **rock**, and for milling **on horizontal, vertical or sloped surfaces.**

Wall alignment device *(Optional)*.

ADVANTAGES

- Perfect finish
- Constant milling depth
- Milling on horizontal, vertical or sloped surfaces
- Ideal for profiling applications

TECHNICAL DATA		MP 800	MP 1000
Recommended excavator weight *(1)*	ton *lbs*	22 - 40 *48500 - 88000*	22 - 40 *48500 - 88000*
Milling width	mm *inch*	800 *31*	1000 *40*
Max. working depth	mm *inch*	100 *4*	100 *4*
Cutting force	kN *lbf*	43,8 *9850*	43,8 *9850*
Operating weight *(2)*	kg *lbs*	2000 *4400*	2300 *5060*
Required oil flow	l/min *gpm*	200 - 300 *53 - 80*	200 - 300 *53 - 80*
Max. required oil pressure	BAR *psi*	350 *5100*	350 *5100*

(1) User is responsible for ensuring that the equipment meets the excavator's specifications and weight requirements.
(2) Without mounting bracket.

Simex does not accept responsibility or liability for the information provided. Technical modifications may vary without prior notice.

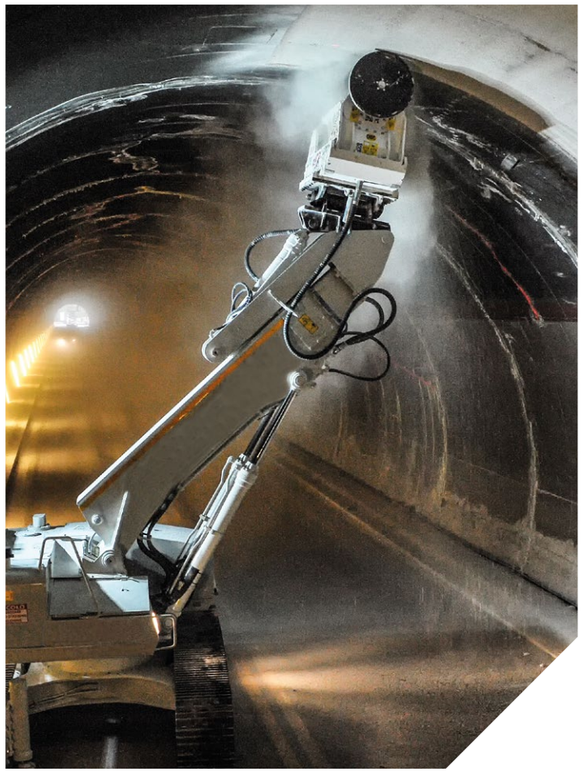

Utilities
Quarries and mines
Demolition
Port and underwater works
Construction and building
Infrastructure
Tunneling
Agriculture and forestry
Recycling
Roadworks
Trenching
Mini-excavator
Excavator
Skid steer loader
Front loader
Backhoe

SIMEX
HEAVY MADE EASY

SIMEX
HEAVY MADE EASY

RANGE

RWE

WHEEL SAWS

RWE 20 | RWE 30 | RWE 50

- Clean trench
- Ideal fiber optics installation
- High performance
- High cutting force

WHEEL SAWS

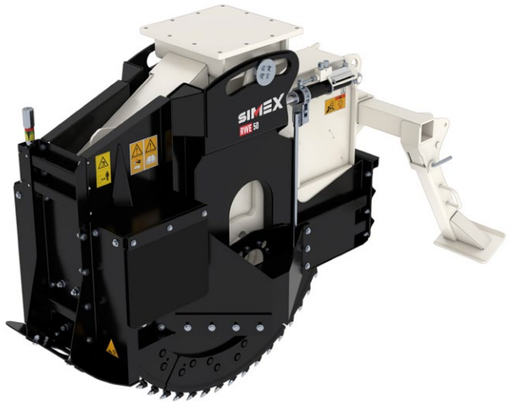

Intended for excavator boom mounting, they are specially indicated for **cutting and narrow trenching for fiber optics installation** on hard and compact surfaces: **asphalt, concrete** and **rock.** Slides parallel to the ground. **Constant trenching depth.** Mechanical or hydraulic adjustment of trench depth. Disk with removable, interchangeable segments allows **quick variation of the trench width** while maintaining the same base wheel. (RWE 50).

Clean trench: the special design of outlets allows trench to be cleared efficiently at the depth programmed.

SIMEX patent · PERFORMER

ADVANTAGES

- Clean trench
- Ideal fiber optics installation
- High performance
- High cutting force

TECHNICAL DATA		RWE 20	RWE 30	RWE 50
Recommended excavator weight *(1)*	ton *lbs*	2,5 - 5 *5500 - 11000*	5 - 10 *11000 - 22000*	14 - 18 *28000 - 39800*
Width	mm *inch*	30 - 40 - 50 *1,2 - 16 - 21*	30 - 50 - 80 *1,2 - 2 - 3*	50 - 80 - 100 - 120 *2 - 3 - 4 - 4,7*
Depth	mm *inch*	200 *8*	300 *12*	300 - 500 *12 -20*
Cutting force	kN lbf	3,7 *830*	7,9 *1775*	8,9 *2000*
Depth adjustment		-	-	hydraulic self-leveling mechanism *(optional)*
Operating weight *(2)*	kg *lbs*	125 *275*	400 *880*	1390 *3060*
Required oil flow	l/min *gpm*	30 - 75 *8 - 20*	60 - 120 *16 - 32*	100 - 160 *26 - 42*
Max. required oil pressure	BAR *psi*	250 *3625*	300 *4350*	350 *5076*

(1) User is responsible for ensuring that the equipment meets the excavator's specifications and weight requirements.
(2) Without mounting bracket attaching to prime mover.

Simex does not accept responsibility or liability for the information provided. Technical modifications may vary without prior notice.

SIMEX
HEAVY MADE EASY

RANGE

RWE

WHEEL SAWS

RWE 60

- Ideal for demolition
- Can work under water
- High performance
- High cutting force

WHEEL SAWS

For excavator boom mounting, RWE 60 wheel saws **are designed to make set-section cuts on hard and compact surfaces**: asphalt, concrete, rock.

Ideal for **demolition and underwater works.** Two high-displacement radial piston hydraulic motors in direct drive guarantee a **high torque.**

SIMEX • patent • PERFORMER

ADVANTAGES

- Ideal for demolition
- Can work under water
- High performance
- High cutting force

TECHNICAL DATA		RWE 60
Recommended excavator weight *(1)*	ton *lbs*	28 - 45 *61000 - 99000*
Width	mm *inch*	100 - 130 - 200 *4 - 5 - 8*
Depth	mm *inch*	600 *24*
Cutting force	kN *lbf*	23 *5170*
Operating weight *(2)*	kg *lbs*	2550 *5600*
Required oil flow	l/min *gpm*	200 - 350 *53 - 93*
Max. required oil pressure	BAR *psi*	350 *5100*

(1) User is responsible for ensuring that the equipment meets the excavator's specifications and weight requirements.
(2) Without mounting bracket attaching to prime mover.

Simex does not accept responsibility or liability for the information provided. Technical modifications may vary without prior notice.

SIMEX
HEAVY MADE EASY

RANGE

CHD

CHAIN TRENCHERS

CHD 90B | CHD 120B | CHD 150B

- Clean trench
- Maximum stability at any depth

CHAIN TRENCHERS

CHD 90B
CHD 120B
CHD 150B

CHD Chain Trenchers for excavator booms are designed for **set-section trenching on soft soils.**

The discharge screw on the righthand side and the trench clearing device make sure the trench is **kept clean**, while **the slide provides maximum stability at any trenching depth.**

Chain is available with hoe blades for soft soils or hoe blades with teeth for mixed soils.

PERFORMER

ADVANTAGES

- Clean trench
- Maximum stability at any depth

TECHNICAL DATA		CHD 90B	CHD 120B	CHD 150B
Max. trench depth	mm *inch*	900 *35*	1200 *47*	1500 *59*
Trench width - standard	mm *inch*	150 *6*	150 *6*	150 *6*
Trench width - optional	mm *inch*	200 - 250 *8 - 10*	200 - 250 *8 - 10*	200 *8*
Scraper		mechanical spring	mechanical spring	mechanical spring
Operating weight *(1) (2)*	kg *lbs*	525 *1150*	590 *1300*	640 *1410*
Required oil flow	l/min *gpm*	60 - 120 *16 - 32*	70 - 140 *18 - 37*	90 - 160 *24 - 42*
Max. oil pressure	BAR *psi*	250 *66*	250 *66*	250 *66*
Recommended excavator size	ton *lbs*	7 - 15 *15400 - 33000*	8 - 15 *17600 - 33000*	8 - 15 *17600 - 33000*

(1) User is responsible for ensuring that the equipment meets the excavator's specifications and weight requirements.
(2) Pressure must be inversely proportional to the flow rate available and vice versa.

Simex does not accept responsibility or liability for the information provided. Technical modifications may vary without prior notice.

SIMEX
HEAVY MADE EASY

RANGE

CT

VIBRATING WHEEL COMPACTORS

CT 2.8B

- Extremely precise and versatile
- Maximum operator comfort
- Result: solid, even and well compacted trench bottom

VIBRATING WHEEL COMPACTORS

Designed for **compacting trench bottoms**, Simex CT vibrating wheel compactors guarantee a permanently **solid, even and well compacted bottom** that ensures maximum road safety. **Perfect insulation** from prime mover. **Thanks to the reverse-rotation vibrating twin shaft** positioned at center of the wheel, vertical forces are added up and horizontal forces are countered for **increased operator comfort.**
Wheel width can be adjusted via bolted sectors that are easily changed on site.
Possibility to mount the rotation allows **compaction in any position**, even in the most difficult-to-reach areas.

ADVANTAGES

- Extremely precise and versatile
- Maximum operator comfort
- Result: solid, even and well compacted trench bottom

TECHNICAL DATA		CT 2.8B
Recommended excavator weight *(1)*	ton *lbs*	5 - 12 *11000 - 26500*
Standard wheel		
Width of bolted sectors (mm)	mm *inch*	150 - 200 - 250 - 300 - 350 - 400 *6 - 8 - 10 -12 -14 - 16*
Working depth	mm *inch*	0 - 700 *0 - 28*
Special wheels		
Wheel width *(2)*	mm *inch*	50 - 100 *2 - 4*
Working depth	mm *inch*	0 - 350 *0 - 14*
Vibration frequency	Hz	30 - 40
Max. vertical force	kN *lbf*	42 *9400*
Operating weight *(3)*	kg *lbs*	530 - 585 *1160 - 1300*
Required oil flow	l/min *gpm*	40 - 60 *11 - 16*
Max. required oil pressure	BAR *psi*	220 *3200*

(1) The maximum operating load permitted for the excavator, when added to the weight of the standard bucket, must match or exceed the weight of the attachment.
(2) User is responsible for ensuring that the equipment meets the excavator's specifications and weight requirements.
(3) Widths different from those indicated are available on request.

Simex does not accept responsibility or liability for the information provided. Technical modifications may vary without prior notice.

SIMEX
HEAVY MADE EASY

RANGE

PV

VIBRATING PLATE COMPACTORS

PV 300 | PV 450 | PV 600 | PV 700 | PV 850

- Precision
- Maintenance-free
- Versatile

RANGE
PV

VIBRATING PLATE COMPACTORS

PV 300
PV 450
PV 600
PV 700
PV 850

Utilities
Quarries and mines
Demolition
Port and underwater works
Construction and building
Infrastructure
Tunneling
Agriculture and forestry
Recycling
Roadworks
Trenching

Mini-excavator
Excavator
Skid steer loader
Front loader
Backhoe

Designed to **compact any surface**, Simex PV vibrating plate compactors are an excellent solution for **achieving a solid, even, and well compacted bottom** that will never give way.

Possibility to mount the rotation device allows compaction in any position and in the most difficult-to-reach spots.

No routine maintenance is needed.

ADVANTAGES

- Precision
- Maintenance-free
- Versatile

DATI TECNICI		PV 300	PV 450	PV 600	PV 700	PV 850
Recommended excavator weight	ton lbs	1,5 - 5 *3300 - 11000*	4 - 10 *8800 - 22000*	6 - 15 *13000 - 33000*	12 - 25 *26400 - 55000*	20 - 40 *44000 - 88000*
Plate dimensions	mm *inch*	290 x 710 *11 x 28*	440 x 710 *17 x 28*	550 x 890 *22 x 35*	710 x 1160 *28 x 45*	860 x 1110 *34 x 44*
Vibration frequency	n/min *vpm*	2100	2100	2100	2100	2100
Compaction force	kN *lbf*	15 *3400*	27 *6000*	34 *7650*	68 *15300*	93 *20900*
Weight without bracket *(1)*	kg *lbs*	190 *420*	300 *660*	410 *900*	875 *1925*	1040 *2300*
Required oil pressure	BAR *psi*	160 *2320*	160 *2320*	160 *2320*	160 *2320*	160 2320
Required oil flow	l/min *gpm*	30 *8*	57 *15*	75 *20*	110 *29*	155 *41*

(1) User is responsible for ensuring that the equipment meets the excavator's specifications and weight requirements.

Simex does not accept responsibility or liability for the information provided. Technical modifications may vary without prior notice.

SIMEX
HEAVY MADE EASY

simex.it

Simex Srl - Soc. Uninom. - Via Isaac Newton, 29-31-33
40017 San Giovanni in Persiceto (BO) - ITALY
VAT/P.IVA 00692551203 - F.C./C.F. 04034530370
+39 0516810609 - +39 0516810628

Rev. 23/03/2019